# Work Order ID 70406

*Tuesday, June 07, 2011 12:46:01 PM*

PRELIMINARY ISSUE



**Item ID:** D4406-041
**Revision ID:** PRELIM
**Item Name:** Fwd Wearplate Assembly

**Accept**

**Setup Start**
**Stop**

**Start Date:** 6/7/2011 **Start Qty:** 2.00
**Required Date:** 6/10/2011 **Req'd Qty:** 2.00
**Reference:**

**Cust Item ID:**
**Customer:**

**Approvals:** **Process Plan:** H **Date:** 11-06-7 **Tooling:** _____ **Date:** _____
**QC:** _____ **Date:** _____ **SPC (Y/N):** _____ **Date:** _____

**Run Start**
**Stop**

| Sequence ID/ Work Center ID | Operation Description | Set Up/ Run Hours | Tool ID | Tool # | Plan Code | Accept Qty | Reject Qty | Reject Number | Insp. Stamp |
|---|---|---|---|---|---|---|---|---|---|
| **Draw Nbr** / **Revision Nbr** | | | | | | | | | |
| D4406 / PA2 | | | | | | | | | |
| 100 | | 0.00 | | | | | | | |
| Waterjet | **Memo** | 0.00 | | | | B11-6-7 | | | |
| FLOW CNC Waterjet<br>354. 050 | 1-Cut as per dwg D4406<br>prog rev: PA2<br>dwg rev: PA2<br><br>2-Deburr if required | | | | | | | 2 | |
| 110 | QC2- Inspect parts off machine FAI/FAIB | 0.00 | | | | | | | |
| QC<br>Quality Control | **Memo** | 0.00 | | | | B11-6-7 | | | |

Dart Aerospace Ltd

| W/O: | | WORK ORDER CHANGES | | | | | |
|---|---|---|---|---|---|---|---|
| DATE | STEP | PROCEDURE CHANGE | By | Date | Qty | Approval Chief Eng / Prod Mgr | Approval QC Inspector |
| | | | | | | | |
| | | | | | | | |

**Part No:** _____ **PAR #:** _____ **Fault Category:** _____ **NCR:** Yes No **DQA:** _____ **Date:** _____

**Resolution:** _____ **Disposition:** _____ **QA: N/C Closed:** _____ **Date:** _____

| NCR: | | WORK ORDER NON-CONFORMANCE (NCR) | | | | | | |
|---|---|---|---|---|---|---|---|---|
| DATE | STEP | Description of NC Section A | Corrective Action Section B | | | Verification Section C | Approval Chief Eng | Approval QC Inspector |
| | | | Initial Chief Eng | Action Description Chief Eng | Sign & Date | | | |
| | | | | | | | | |
| | | | | | | | | |
| | | | | | | | | |

**NOTE:** Date & initial all entries

H:\fFORMS\Quality Assurance\approved QA\NCRWO RevE

# Work Order ID 70406

*Tuesday, June 07, 2011 12:46:01 PM*



**Item ID:** D4406-041
**Revision ID:** PRELIM
**Item Name:** Fwd Wearplate Assembly

**Accept**

**Setup Start**
**Stop**

**Start Date:** 6/7/2011 **Start Qty:** 2.00
**Required Date:** 6/10/2011 **Req'd Qty:** 2.00
**Reference:**

**Cust Item ID:**
**Customer:**

**Run Start**
**Stop**

**Approvals:** **Process Plan:** _____ **Date:** _____ **Tooling:** _____ **Date:** _____
**QC:** _____ **Date:** _____ **SPC (Y/N):** _____ **Date:** _____

| Sequence ID/ Work Center ID | Operation Description | Set Up/ Run Hours | Tool ID | Tool # | Plan Code | Accept Qty | Reject Qty | Reject Number | Insp. Stamp |
|---|---|---|---|---|---|---|---|---|---|
| 120 | QC8- Inspect parts - second check | 0.00 – inspector to PA2 | | | | | | | |
| QC | Memo | 0.00 Day only & wkoeloo | | 72 | | | | | |
| Quality Control | | | | | | | | | |
| 130 | | 0.00 | | | | | | | |
| Small Fab | Memo | 0.00 SB wkoeloo | | | | 2 | | | |
| Small Fab | Form as per dwg D4406 | | | | | | | | |
| 140 | QC5- Inspect part completeness to step on W/O | 0.00 | | | | | | | |
| QC | Memo | 0.00 & wkoeloo to PA2 Day only | | | | 2 | | | |
| Quality Control | | | | | | | | | |

Dart Aerospace Ltd

| W/O: | | WORK ORDER CHANGES | | | | | |
|---|---|---|---|---|---|---|---|
| DATE | STEP | PROCEDURE CHANGE | By | Date | Qty | Approval Chief Eng / Prod Mgr | Approval QC Inspector |
| | | | | | | | |
| | | | | | | | |

**Part No:** _____ **PAR #:** _____ **Fault Category:** _____ **NCR:** Yes No **DQA:** _____ **Date:** _____

**Resolution:** _____ **Disposition:** _____ **QA: N/C Closed:** _____ **Date:** _____

| NCR: | | WORK ORDER NON-CONFORMANCE (NCR) | | | | | | |
|---|---|---|---|---|---|---|---|---|
| DATE | STEP | Description of NC Section A | Corrective Action Section B | | | Verification Section C | Approval Chief Eng | Approval QC Inspector |
| | | | Initial Chief Eng | Action Description Chief Eng | Sign & Date | | | |
| | | | | | | | | |
| | | | | | | | | |
| | | | | | | | | |

**NOTE:** Date & initial all entries

# Work Order ID 70406

*Tuesday, June 07, 2011 12:46:01 PM*



**Item ID:** D4406-041
**Revision ID:** PRELIM
**Item Name:** Fwd Wearplate Assembly

**Accept**

**Setup Start**
**Stop**

**Start Date:** 6/7/2011 **Start Qty:** 2.00
**Required Date:** 6/10/2011 **Req'd Qty:** 2.00
**Reference:**

**Cust Item ID:**
**Customer:**

**Run Start**
**Stop**

**Approvals:** **Process Plan:** _____ **Date:** _____ **Tooling:** _____ **Date:** _____
**QC:** _____ **Date:** _____ **SPC (Y/N):** _____ **Date:** _____

| Sequence ID/ Work Center ID | Operation Description | Set Up/ Run Hours | Tool ID | Tool # | Plan Code | Accept Qty | Reject Qty | Reject Number | Insp. Stamp |
|---|---|---|---|---|---|---|---|---|---|
| 150 | | 0.00 | | | | X2 | 11-06-15 | | EL/JBL |
| Large Fab | **Memo** | 0.00 | | | | | | | |
| Large Fab | weld wearplate as per dwg D4406<br>M11 7607 - 20598<br>M10 7051 - 304 | | | | | | | | |
| 160 | QC10- Inspect visual per QSI004- ground welds | 0.00 | | | | | 11.06.15 | | |
| QC | **Memo** | 0.00 | | | | | | | |
| Quality Control | | | | | | | | | |
| 170 | | 0.00 | | | | | RT 11-06-16 | | (X2) |
| Small Fab | **Memo** | 0.00 | | | | | | | |
| Small Fab | Apply coating as per dwg D4406 | | | | | | | | |

Dart Aerospace Ltd

| W/O: | | WORK ORDER CHANGES | | | | | |
|---|---|---|---|---|---|---|---|
| DATE | STEP | PROCEDURE CHANGE | By | Date | Qty | Approval Chief Eng / Prod Mgr | Approval QC Inspector |
| | | | | | | | |
| | | | | | | | |

**Part No:** _____ **PAR #:** _____ **Fault Category:** _____ **NCR:** Yes No **DQA:** _____ **Date:** _____

**Resolution:** _____ **Disposition:** _____ **QA: N/C Closed:** _____ **Date:** _____

| NCR: | | WORK ORDER NON-CONFORMANCE (NCR) | | | | | | |
|---|---|---|---|---|---|---|---|---|
| DATE | STEP | Description of NC Section A | Corrective Action Section B | | | Verification Section C | Approval Chief Eng | Approval QC Inspector |
| | | | Initial Chief Eng | Action Description Chief Eng | Sign & Date | | | |
| | | | | | | | | |
| | | | | | | | | |
| | | | | | | | | |

**NOTE:** Date & initial all entries

H:\FORMS\Quality Assurance\approved QA\NCRWO RevE

# Work Order ID 70406

*Tuesday, June 07, 2011 12:46:01 PM*



**Item ID:** D4406-041
**Revision ID:** PRELIM
**Item Name:** Fwd Wearplate Assembly

**Accept**

**Setup Start**
**Stop**

**Start Date:** 6/7/2011 **Start Qty:** 2.00
**Required Date:** 6/10/2011 **Req'd Qty:** 2.00
**Reference:**

**Cust Item ID:**
**Customer:**

**Run Start**
**Stop**

**Approvals:** **Process Plan:** _____ **Date:** _____ **Tooling:** _____ **Date:** _____
**QC:** _____ **Date:** _____ **SPC (Y/N):** _____ **Date:** _____

| Sequence ID/ Work Center ID | Operation Description | Set Up/ Run Hours | Tool ID | Tool # | Plan Code | Accept Qty | Reject Qty | Reject Number | Insp. Stamp |
|---|---|---|---|---|---|---|---|---|---|
| 180 | QC5- Inspect part completeness to step on W/O | 0.00 | | | | M | 11 | 06 | 16 (2) |
| QC Quality Control | Memo | 0.00 | | | | | | | |
| 190 | Identify as per dwg & Stock Location: GAG | 0.00 | | | | | | | |
| Packaging Packaging | Memo | 0.00 | | | | | | | |
| 200 | QC21- Final Inspection - Work Order Release | 0.00 | | | | | | | |
| QC Quality Control | Memo | 0.00 | | | | | | | |

RD2385

WW0712

POSITIVE RECALL
EFFECTIVE WW 20 AUTH W
RELEASED _____ DATE _____

Dart Aerospace Ltd

| W/O: | | WORK ORDER CHANGES | | | | | |
|---|---|---|---|---|---|---|---|
| DATE | STEP | PROCEDURE CHANGE | By | Date | Qty | Approval Chief Eng / Prod Mgr | Approval QC Inspector |
| | | | | | | | |
| | | | | | | | |

**Part No:** _____ **PAR #:** _____ **Fault Category:** _____ **NCR:** Yes No **DQA:** _____ **Date:** _____

**Resolution:** _____ **Disposition:** _____ **QA: N/C Closed:** _____ **Date:** _____

| NCR: | | WORK ORDER NON-CONFORMANCE (NCR) | | | | | | |
|---|---|---|---|---|---|---|---|---|
| DATE | STEP | Description of NC Section A | Corrective Action Section B | | | Verification Section C | Approval Chief Eng | Approval QC Inspector |
| | | | Initial Chief Eng | Action Description Chief Eng | Sign & Date | | | |
| | | | | | | | | |
| | | | | | | | | |
| | | | | | | | | |

**NOTE:** Date & initial all entries

H:\fFORMS\Quality Assurance\approved QA\NCRWO RevE

# Picklist Print



*Tuesday, June 07, 2011 12:46:12 PM*

**Work Order ID:** 70406

**Parent Item:** D4406-041

**Parent Item Name:** Fwd Wearplate Assembly

**Start Date:** 6/7/2011 **Required Date:** 6/10/2011

**Start Qty:** 2.00 **Required Qty:** 2.00

**Comments:** IPP rev A 11.06.06 new issue EC verified by:DD

| Component Item ID/ Item Name | Replacement Item ID | Mfg/ Purch | Bin Item | Primary Location | Last Location | Route Seq ID | Unit of Measure | Qty on Hand | Qty per Kit | Total Qty | Qty Issued | Date Issued | Status |
|---|---|---|---|---|---|---|---|---|---|---|---|---|---|
| M304S18GA<br>304/316 .050 Sheet | | Purchased | No | | | 100 | sf | 158.9000 | 3.7 | 7.789474 | | | |
| | | | | **Location** | | **Loc Qty** | | **Loc Code** | | | | | |
| | | | | MAT020 | | 158.9 | | | | | | | |
| | | | | | 112178 | 3.4 | | | | | | | |
| | | | | | 113062 | 18 | | | | | | | |
| | | | | | 116604 | 1.5 | | | | 116604 | | | |
| | | | | | 116979 | 69 | | | | | | | |
| | | | | | 117653 | 67 | | | | | | | |
| D4407-1<br>Bar | | Manufactured | No | | | 150 | Each | 0.0000 | 1 | 2 | | | |

TB 11-6-7

2

70408

X2 11-6-14 JBL

Dart Aerospace Ltd

| W/O: | | WORK ORDER CHANGES | | | | | |
|---|---|---|---|---|---|---|---|
| DATE | STEP | PROCEDURE CHANGE | By | Date | Qty | Approval Chief Eng / Prod Mgr | Approval QC Inspector |
| | | | | | | | |
| | | | | | | | |

Part No: _____ PAR #: _____ Fault Category: _____ NCR: Yes No DQA: _____ Date: _____

Resolution: _____ Disposition: _____ QA: N/C Closed: _____ Date: _____

| NCR: | | WORK ORDER NON-CONFORMANCE (NCR) | | | | | | |
|---|---|---|---|---|---|---|---|---|
| DATE | STEP | Description of NC Section A | Corrective Action Section B | | | Verification Section C | Approval Chief Eng | Approval QC Inspector |
| | | | Initial Chief Eng | Action Description Chief Eng | Sign & Date | | | |
| | | | | | | | | |
| | | | | | | | | |
| | | | | | | | | |

**NOTE:** Date & initial all entries

H:\fFORMS\Quality Assurance\approved QA\NCRWO RevE

| DART AEROSPACE LTD | Work Order: | 70406 |
|---|---|---|
| Description: FWD WEARPLATE ASSEMBLY | Part Number: | D4406-041 |
| Inspection Dwg: D4404-1 , Rev: pR2 | | Page 1 of 1 |

# FIRST ARTICLE INSPECTION CHECKLIST

[X] First Article [X] Prototype

| Drawing Dimension | Tolerance | Actual Dimension | Accept | Reject | Method of Inspection | Comments |
|---|---|---|---|---|---|---|
| .30 | +/- .030 | .304 | ✓ | | V | |
| Ø .532 | +/- .010 | .531 | ✓ | | V | |
| .88 | +/- .030 | .880 | ✓ | | V | |
| .13 | +/- .030 | .126 | ✓ | | V | |
| .31 | +/- .030 | .306 | ✓ | | V | |
| 8.07 | +/- .030 | 8.067 | ✓ | | V | |
| 6.941 | +/- .010 | 6.943 | ✓ | | V | |
| Ø .188 | +.008 -.001 | .190 | ✓ | | V | |
| 2.43 | +/- .030 | 2.448 | ✓ | | V | |
| 7.80 | +/- .030 | 7.807 | ✓ | | V | |
| 6.672 | +/- .010 | 6.678 | ✓ | | V | |
| 1.45 | +/- .030 | 1.45 | ✓ | | V | |
| 13.375 | +/- .010 | 13.375 | ✓ | | T | |
| 37.938 | +/- .010 | 37.938 | ✓ | | T | |
| 64.36 | +/- .030 | 64.36 | ✓ | | T | |
| 66.38 | +/- .030 | 66.38 | ✓ | | T | |
| 3.63 | +/- .030 | 3.633 | ✓ | | V | |
| 7.00 | +/- .030 | 7.00 | ✓ | | V | |
| 4.10 | +/- .030 | 4.099 | ✓ | | V | |
| 36.00 | +/- .030 | 36.00 | ✓ | | T | |
| .050 | +/- .010 | .050 | ✓ | | V | |
| | | | | | | |
| | | | | | | |

| Measured by: | IB | Audited by: | δ | Prototype Approval: | |
|---|---|---|---|---|---|
| Date: | 11-6-7 | Date: | 11/06/08 | Date: | |

to PAD Dy only

| Rev | Date | Change | Revised by | Approved |
|---|---|---|---|---|
| A | | New Issue | KJ/JLM | |

| ITEM | QTY -041 | QTY -043 | P/N | DESCRIPTION |
|---|---|---|---|---|
| 1 | X | | D4406-041 | FWD WEARPLATE ASSY |
| 2 | | X | D4406-043 | AFT WEARPLATE ASSY |
| | | | | |
| 3 | 1 | | | PLATE |
| 4 | | 1 | D4406-3 | PLATE |
| 5 | 1 | | D4407-1 | BAR |
| 6 | | 1 | D4407-3 | BAR |
| | | | | |
| 7 | A/R | A/R | 2059B | HARDCOAT |
| 8 | A/R | A/R | 4714 | PLUS ONE ROCKGUARD (SEE NOTE 11, SHT 2 & 3) |

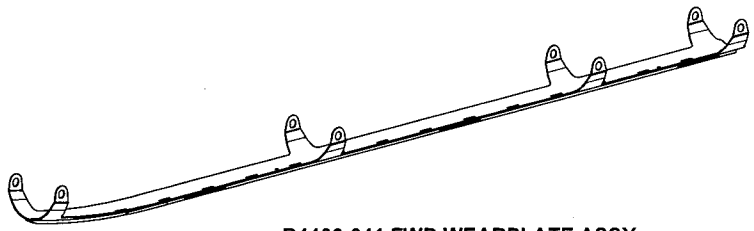

**D4406-041 FWD WEARPLATE ASSY**

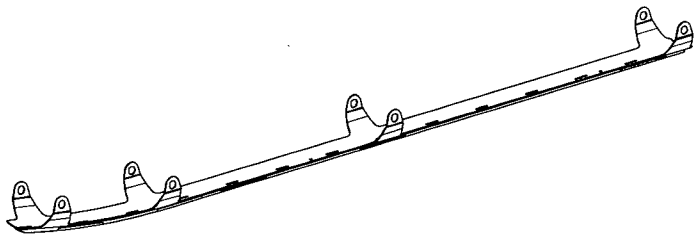

**D4406-043 AFT WEARPLATE ASSY**

SHOP COPY
RETURN TO
ENGINEERING
UNCONTROLLED COPY
SUBJECT TO AMENDMENT
WITHOUT NOTICE
WORK ORDER
NO. 70404
11-06-7

# PRELIMINARY ISSUE

RF 11.05.27

| REV. | DESCRIPTION | BY | DATE |
|---|---|---|---|
| PA2 | NEW ISSUE | RF | 11.05.27 |

| | | |
|---|---|---|
| DESIGN | RF | **DART AEROSPACE LTD** HAWKESBURY, ONTARIO, CANADA |
| DRAWN | RF | |
| CHECKED | | DRAWING NO. D4406 — REV. PA2 — SHEET 1 OF 6 |
| MFG. APPR. | | |
| APPROVED | | TITLE: WEARPLATE ASSY — SCALE: NTS |
| DE APPR. | | |
| DATE | 11.05.27 | |

COPYRIGHT © 2011 BY DART AEROSPACE LTD
THIS DOCUMENT IS PRIVATE AND CONFIDENTIAL AND IS SUPPLIED ON THE EXPRESS CONDITION THAT IT IS NOT TO BE USED FOR ANY PURPOSE OR COPIED OR COMMUNICATED TO ANY OTHER PERSON WITHOUT WRITTEN PERMISSION FROM DART AEROSPACE LTD.

Dart Aerospace Ltd

| W/O: | | WORK ORDER CHANGES | | | | | |
|---|---|---|---|---|---|---|---|
| DATE | STEP | PROCEDURE CHANGE | By | Date | Qty | Approval Chief Eng / Prod Mgr | Approval QC Inspector |
| | | | | | | | |
| | | | | | | | |

Part No: _____ PAR #: _____ Fault Category: _____ NCR: Yes No DQA: _____ Date: _____

Resolution: _____ Disposition: _____ QA: N/C Closed: _____ Date: _____

| NCR: | | WORK ORDER NON-CONFORMANCE (NCR) | | | | | | |
|---|---|---|---|---|---|---|---|---|
| DATE | STEP | Description of NC Section A | Corrective Action Section B | | | Verification Section C | Approval Chief Eng | Approval QC Inspector |
| | | | Initial Chief Eng | Action Description Chief Eng | Sign & Date | | | |
| | | | | | | | | |
| | | | | | | | | |
| | | | | | | | | |

**NOTE:** Date & initial all entries

H:\fFORMS\Quality Assurance\approved QA\NCRWO RevE

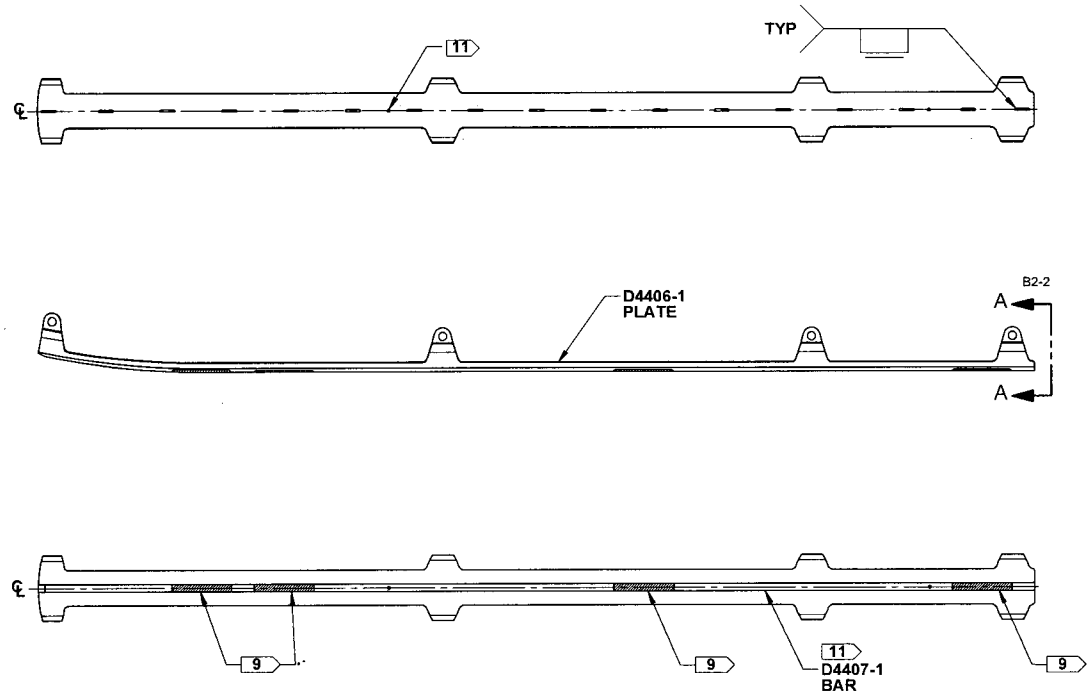


w/o 70404

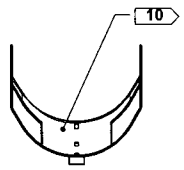


C3-2 **SECTION A-A**
SCALE 2X

**D4406-041 FWD WEARPLATE ASSY**

# PRELIMINARY ISSUE

11.05.27

NOTES:
1) MATERIAL: N/A
2) FINISH: NONE
3) TOLERANCES: PER DART QSI 018 UNLESS OTHERWISE NOTED
4) UNITS: INCHES UNLESS OTHERWISE NOTED
5) BREAK SHARP EDGES: 0.005 TO 0.010 MAX
6) IDENTIFICATION: IDENTIFY PER QSI 044 6.1
7) WEIGHT: 5.12 lbs
8) WELDING: PER QSI 004
9) 2059B HARDCOAT WELD, 0.19 THICK x 0.50 WIDE, FLUSH WITH D4407-1 BAR ON ALL 3 SURFACES
10) AFTER FINISH, COAT ENTIRE TOP (CONCAVE) SURFACE WITH A LAYER PLUS ONE ROCKGUARD 4714, 0.020-0.040 THICK
11) FORM TO MATCH PROFILE OF D4406-1 AT TIME OF WELDING

| | | |
|---|---|---|
| DESIGN | RF | **DART AEROSPACE LTD** HAWKESBURY, ONTARIO, CANADA |
| DRAWN | RF | |
| CHECKED | | DRAWING NO. D4406 — REV. PA2 — SHEET 2 OF 6 |
| MFG. APPR. | | |
| APPROVED | | TITLE WEARPLATE ASSY — SCALE NTS |
| DE APPR. | | |
| DATE | 11.05.27 | |

COPYRIGHT © 2011 BY DART AEROSPACE LTD
THIS DOCUMENT IS PRIVATE AND CONFIDENTIAL AND IS SUPPLIED ON THE EXPRESS CONDITION THAT IT IS NOT TO BE USED FOR ANY PURPOSE OR COPIED OR COMMUNICATED TO ANY OTHER PERSON WITHOUT WRITTEN PERMISSION FROM DART AEROSPACE LTD.

Dart Aerospace Ltd

| W/O: | | WORK ORDER CHANGES | | | | | |
|---|---|---|---|---|---|---|---|
| DATE | STEP | PROCEDURE CHANGE | By | Date | Qty | Approval Chief Eng / Prod Mgr | Approval QC Inspector |
| | | | | | | | |
| | | | | | | | |

**Part No:** _____ **PAR #:** _____ **Fault Category:** _____ **NCR:** Yes No **DQA:** _____ **Date:** _____

**Resolution:** _____ **Disposition:** _____ **QA: N/C Closed:** _____ **Date:** _____

| NCR: | | WORK ORDER NON-CONFORMANCE (NCR) | | | | | | |
|---|---|---|---|---|---|---|---|---|
| DATE | STEP | Description of NC Section A | Corrective Action Section B | | | Verification Section C | Approval Chief Eng | Approval QC Inspector |
| | | | Initial Chief Eng | Action Description Chief Eng | Sign & Date | | | |
| | | | | | | | | |
| | | | | | | | | |
| | | | | | | | | |

**NOTE:** Date & initial all entries

H:\fFORMS\Quality Assurance\approved QA\NCRWO RevE

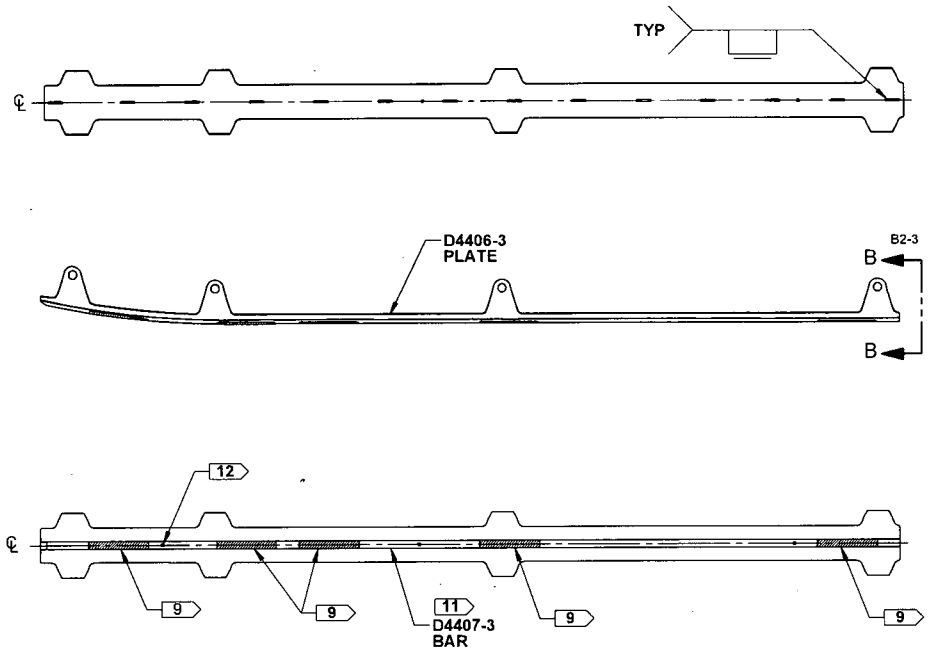


**D4406-043 AFT WEARPLATE ASSY**

w/o 70404

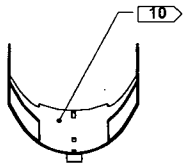


C3-3 **SECTION B-B**
SCALE 2X

NOTES:
1) MATERIAL: N/A
2) FINISH: NONE
3) TOLERANCES: PER DART QSI 018 UNLESS OTHERWISE NOTED
4) UNITS: INCHES UNLESS OTHERWISE NOTED
5) BREAK SHARP EDGES: 0.005 TO 0.010 MAX
6) IDENTIFICATION: IDENTIFY PER QSI 044 6.1
7) WEIGHT: 4.51 lbs
8) WELDING: PER QSI 004
9) 2059B HARDCOAT WELD, 0.19 THICK x 0.50 WIDE, FLUSH WITH D4407-3 BAR ON ALL 3 SURFACES
10) AFTER FINISH, COAT ENTIRE TOP (CONCAVE) SURFACE WITH A LAYER PLUS ONE ROCKGUARD 4714, 0.020-0.040 THICK
11) FORM TO MATCH PROFILE OF D4406-3 AT TIME OF WELDING
12) FILL TOOLING HOLE WITH WELD ONE PLACE ONLY

**PRELIMINARY ISSUE**

11.05.27

| | | |
|---|---|---|
| DESIGN | RF | **DART AEROSPACE LTD** HAWKESBURY, ONTARIO, CANADA |
| DRAWN | RF | |
| CHECKED | | DRAWING NO. D4406 — REV. PA2 — SHEET 3 OF 6 |
| MFG. APPR. | | |
| APPROVED | | TITLE WEARPLATE ASSY — SCALE NTS |
| DE APPR. | | |
| DATE | 11.05.27 | |

COPYRIGHT © 2011 BY DART AEROSPACE LTD
THIS DOCUMENT IS PRIVATE AND CONFIDENTIAL AND IS SUPPLIED ON THE EXPRESS CONDITION THAT IT IS NOT TO BE USED FOR ANY PURPOSE OR COPIED OR COMMUNICATED TO ANY OTHER PERSON WITHOUT WRITTEN PERMISSION FROM DART AEROSPACE LTD.

Dart Aerospace Ltd

| W/O: | | WORK ORDER CHANGES | | | | | |
|---|---|---|---|---|---|---|---|
| DATE | STEP | PROCEDURE CHANGE | By | Date | Qty | Approval Chief Eng / Prod Mgr | Approval QC Inspector |
| | | | | | | | |
| | | | | | | | |

**Part No:** _____ **PAR #:** _____ **Fault Category:** _____ **NCR:** Yes No **DQA:** _____ **Date:** _____

**Resolution:** _____ **Disposition:** _____ **QA: N/C Closed:** _____ **Date:** _____

| NCR: | | WORK ORDER NON-CONFORMANCE (NCR) | | | | | | |
|---|---|---|---|---|---|---|---|---|
| DATE | STEP | Description of NC Section A | Corrective Action Section B | | | Verification Section C | Approval Chief Eng | Approval QC Inspector |
| | | | Initial Chief Eng | Action Description Chief Eng | Sign & Date | | | |
| | | | | | | | | |
| | | | | | | | | |
| | | | | | | | | |

**NOTE:** Date & initial all entries

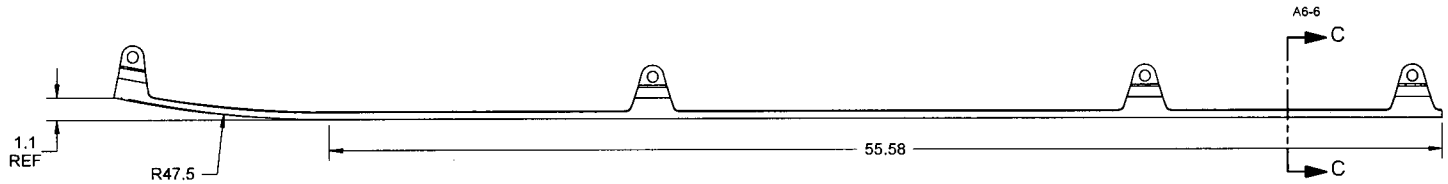


**D4406-1 PLATE**
(MAKE FROM D4406-1F)

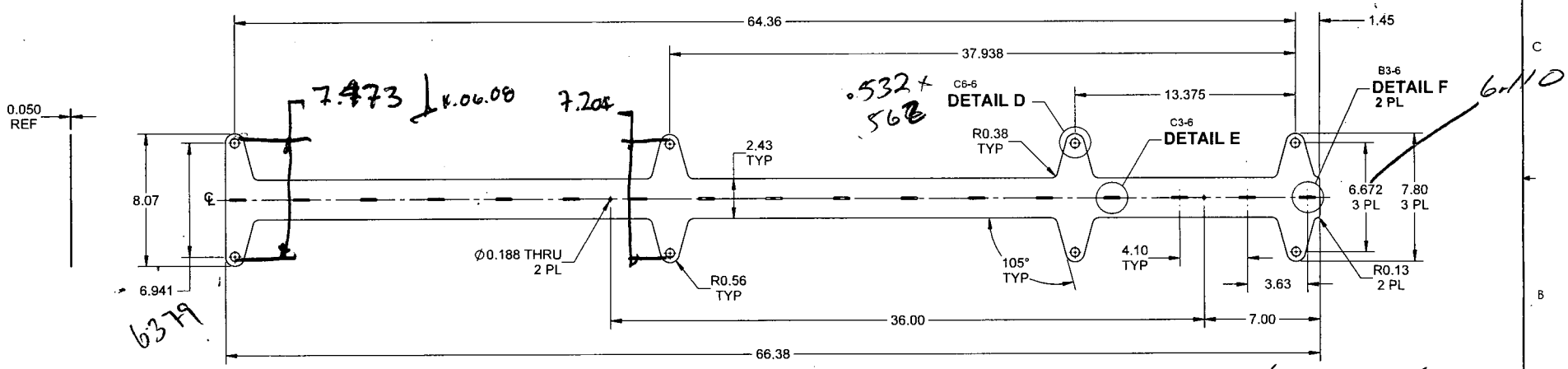


**D4406-1F FLAT PATTERN**

## PRELIMINARY ISSUE

11.05.27

NOTES:
1) MATERIAL: AISI 304/316 STAINLESS STEEL SHEET, 0.050 THICK (18 GAUGE)
PER AMS 5513 OR 5524
OR ASTM A240 OR ASME SA240
REF. DART SPEC. M304S18GA
2) FINISH: NONE
3) TOLERANCES: PER DART QSI 018 UNLESS OTHERWISE NOTED
4) UNITS: INCHES UNLESS OTHERWISE NOTED
5) BREAK SHARP EDGES: 0.005 TO 0.010 MAX
6) IDENTIFICATION: NONE
7) WEIGHT: 2.33 lbs

| | | |
|---|---|---|
| DESIGN | RF | **DART AEROSPACE LTD** HAWKESBURY, ONTARIO, CANADA |
| DRAWN | RF | |
| CHECKED | | DRAWING NO. D4406 — REV. PA2 — SHEET 4 OF 6 |
| MFG. APPR. | | |
| APPROVED | | TITLE: WEARPLATE ASSY — SCALE: NTS |
| DE APPR. | | |
| DATE | 11.05.27 | |

COPYRIGHT © 2011 BY DART AEROSPACE LTD
THIS DOCUMENT IS PRIVATE AND CONFIDENTIAL AND IS SUPPLIED ON THE EXPRESS CONDITION THAT IT IS NOT TO BE USED FOR ANY PURPOSE OR COPIED OR COMMUNICATED TO ANY OTHER PERSON WITHOUT WRITTEN PERMISSION FROM DART AEROSPACE LTD.

Dart Aerospace Ltd

| W/O: | | WORK ORDER CHANGES | | | | | |
|---|---|---|---|---|---|---|---|
| DATE | STEP | PROCEDURE CHANGE | By | Date | Qty | Approval Chief Eng / Prod Mgr | Approval QC Inspector |
| | | | | | | | |
| | | | | | | | |

Part No: _____ PAR #: _____ Fault Category: _____ NCR: Yes No DQA: _____ Date: _____

Resolution: _____ Disposition: _____ QA: N/C Closed: _____ Date: _____

| NCR: | | WORK ORDER NON-CONFORMANCE (NCR) | | | | | | |
|---|---|---|---|---|---|---|---|---|
| DATE | STEP | Description of NC Section A | Corrective Action Section B | | | Verification Section C | Approval Chief Eng | Approval QC Inspector |
| | | | Initial Chief Eng | Action Description Chief Eng | Sign & Date | | | |
| | | | | | | | | |
| | | | | | | | | |
| | | | | | | | | |

**NOTE:** Date & initial all entries

H:\fFORMS\Quality Assurance\approved QA\NCRWO RevE

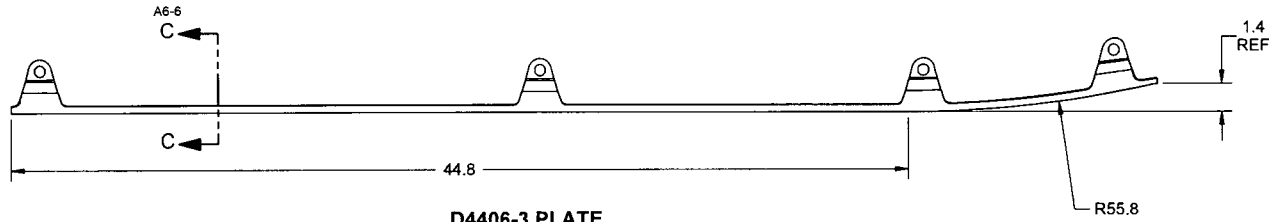


**D4406-3 PLATE**
(MAKE FROM D4403-3F)

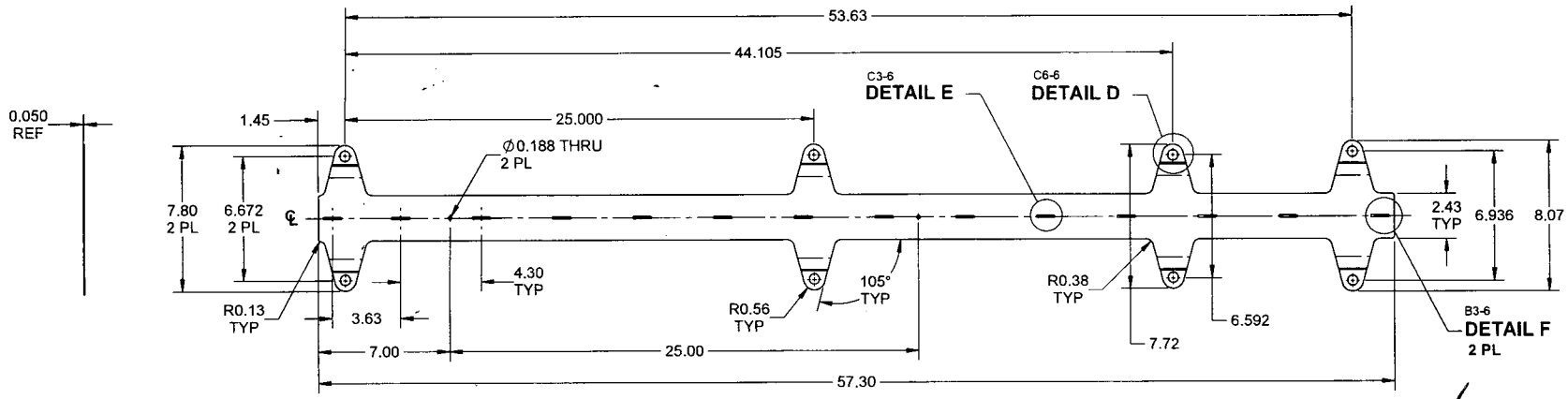


w/o 90406

**D4406-3F FLAT PATTERN**

## PRELIMINARY ISSUE

RF 11.05.27

NOTES:
1) MATERIAL: AISI 304/316 STAINLESS STEEL SHEET, 0.050 THICK (18 GAUGE)
PER AMS 5513 OR 5524
OR ASTM A240 OR ASME SA240
REF. DART SPEC. M304S18GA
2) FINISH: NONE
3) TOLERANCES: PER DART QSI 018 UNLESS OTHERWISE NOTED
4) UNITS: INCHES UNLESS OTHERWISE NOTED
5) BREAK SHARP EDGES: 0.005 TO 0.010 MAX
6) IDENTIFICATION: NONE
7) WEIGHT: 2.33 lbs

| | | |
|---|---|---|
| DESIGN | RF | **DART AEROSPACE LTD** HAWKESBURY, ONTARIO, CANADA |
| DRAWN | RF | |
| CHECKED | | DRAWING NO. D4406 — REV. PA2 — SHEET 5 OF 6 |
| MFG. APPR. | | |
| APPROVED | | TITLE: WEARPLATE ASSY — SCALE: NTS |
| DE APPR. | | |
| DATE | 11.05.27 | |

COPYRIGHT © 2011 BY DART AEROSPACE LTD
THIS DOCUMENT IS PRIVATE AND CONFIDENTIAL AND IS SUPPLIED ON THE EXPRESS CONDITION THAT IT IS NOT TO BE USED FOR ANY PURPOSE OR COPIED OR COMMUNICATED TO ANY OTHER PERSON WITHOUT WRITTEN PERMISSION FROM DART AEROSPACE LTD.

Dart Aerospace Ltd

| W/O: | | WORK ORDER CHANGES | | | | | |
|---|---|---|---|---|---|---|---|
| DATE | STEP | PROCEDURE CHANGE | By | Date | Qty | Approval Chief Eng / Prod Mgr | Approval QC Inspector |
| | | | | | | | |
| | | | | | | | |

Part No: _____ PAR #: _____ Fault Category: _____ NCR: Yes No DQA: _____ Date: _____

Resolution: _____ Disposition: _____ QA: N/C Closed: _____ Date: _____

| NCR: | | WORK ORDER NON-CONFORMANCE (NCR) | | | | | | |
|---|---|---|---|---|---|---|---|---|
| DATE | STEP | Description of NC Section A | Corrective Action Section B | | | Verification Section C | Approval Chief Eng | Approval QC Inspector |
| | | | Initial Chief Eng | Action Description Chief Eng | Sign & Date | | | |
| | | | | | | | | |
| | | | | | | | | |
| | | | | | | | | |

**NOTE:** Date & initial all entries

H:\fFORMS\Quality Assurance\approved QA\NCRWO RevE

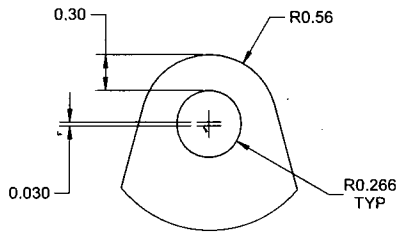


**DETAIL D** C3-4 C4-5
SLOT DETAIL TYP
SCALE 6X

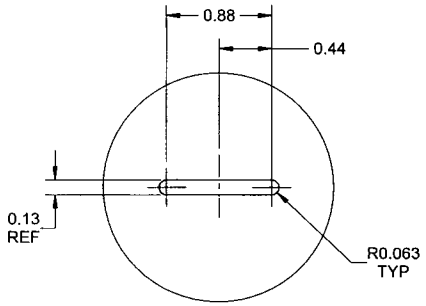


**DETAIL E** C2-4 C4-5
SLOT DETAIL TYP
SCALE 6X

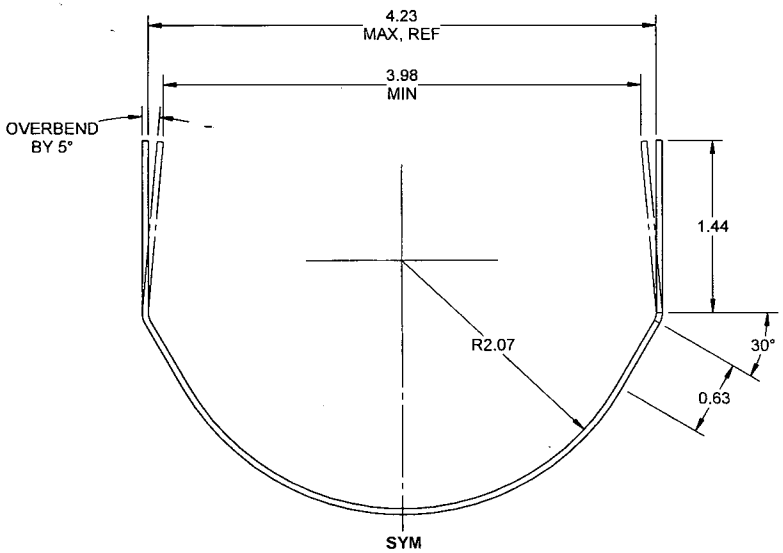


**DETAIL C** D2-4 D6-5
DETAIL TYP
SCALE 6X

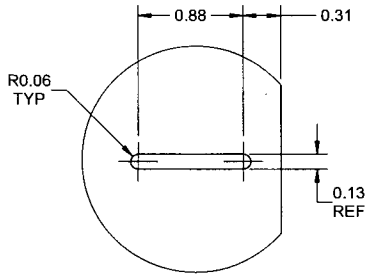


**DETAIL F** C1-4 B1-5
SLOT DETAIL TYP
SCALE 6X

w/o 70406

**PRELIMINARY ISSUE**

RF 11.05.27

| | | |
|---|---|---|
| DESIGN | RF | **DART AEROSPACE LTD** HAWKESBURY, ONTARIO, CANADA |
| DRAWN | RF | |
| CHECKED | | DRAWING NO. D4406 — REV. PA2 — SHEET 6 OF 6 |
| MFG. APPR. | | |
| APPROVED | | TITLE: WEARPLATE ASSY — SCALE: NTS |
| DE APPR. | | |
| DATE | 11.05.27 | |

COPYRIGHT © 2011 BY DART AEROSPACE LTD
THIS DOCUMENT IS PRIVATE AND CONFIDENTIAL AND IS SUPPLIED ON THE EXPRESS CONDITION THAT IT IS NOT TO BE USED FOR ANY PURPOSE OR COPIED OR COMMUNICATED TO ANY OTHER PERSON WITHOUT WRITTEN PERMISSION FROM DART AEROSPACE LTD.

Dart Aerospace Ltd

| W/O: | | WORK ORDER CHANGES | | | | | |
|---|---|---|---|---|---|---|---|
| DATE | STEP | PROCEDURE CHANGE | By | Date | Qty | Approval Chief Eng / Prod Mgr | Approval QC Inspector |
| | | | | | | | |
| | | | | | | | |

**Part No:** _____ **PAR #:** _____ **Fault Category:** _____ **NCR:** Yes No **DQA:** _____ **Date:** _____

**Resolution:** _____ **Disposition:** _____ **QA: N/C Closed:** _____ **Date:** _____

| NCR: | | WORK ORDER NON-CONFORMANCE (NCR) | | | | | | |
|---|---|---|---|---|---|---|---|---|
| DATE | STEP | Description of NC Section A | Corrective Action Section B | | | Verification Section C | Approval Chief Eng | Approval QC Inspector |
| | | | Initial Chief Eng | Action Description Chief Eng | Sign & Date | | | |
| | | | | | | | | |
| | | | | | | | | |
| | | | | | | | | |

**NOTE:** Date & initial all entries